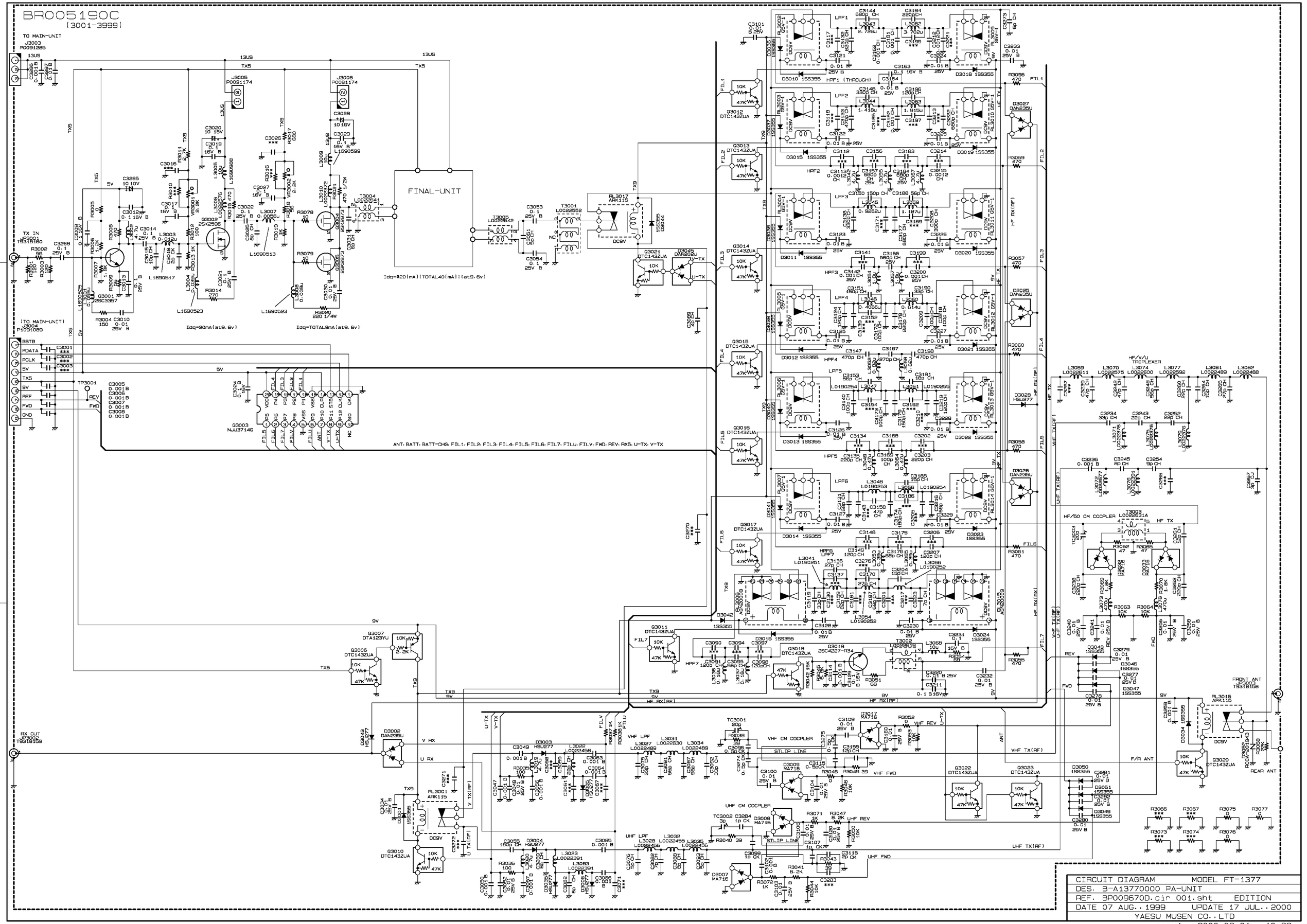

CIRCUIT DIAGRAM	MODEL FT-1377
DES. B-A13770000 PA-UNIT	
REF. BP009670D.cir 001.sht	EDITION
DATE 07 AUG.'1999	UPDATE 17 JUL.'2000
YAESU MUSEN CO.,LTD	

yaesu1 2000.08.01 10:38